SolidCAM

The Leaders in Integrated CAM

MATERIAL
TOOL
GEOMETRY
MACHINE

iMachining
Technology-Wizard

Full automatic calculation of:
Feed Rate
Spindle Speed
Step Over
Depth

The Complete CAM Solution, with revolutionary iMachining, fully Integrated in SolidWorks

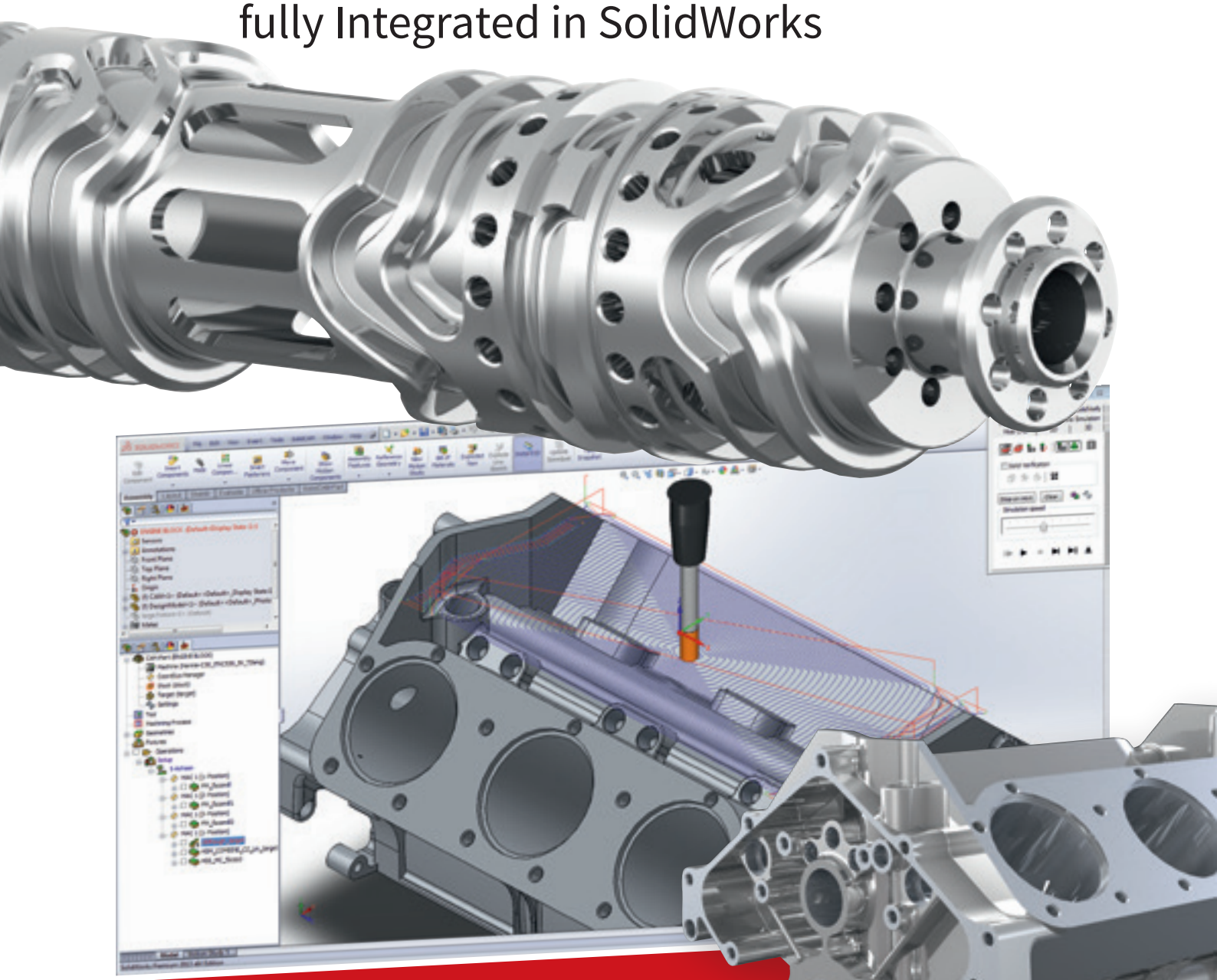

The unique, revolutionary Milling Technology

iMachining®

patent by SolidCAM

TIME SAVINGS

70%

... AND MORE!

www.solidcam.com

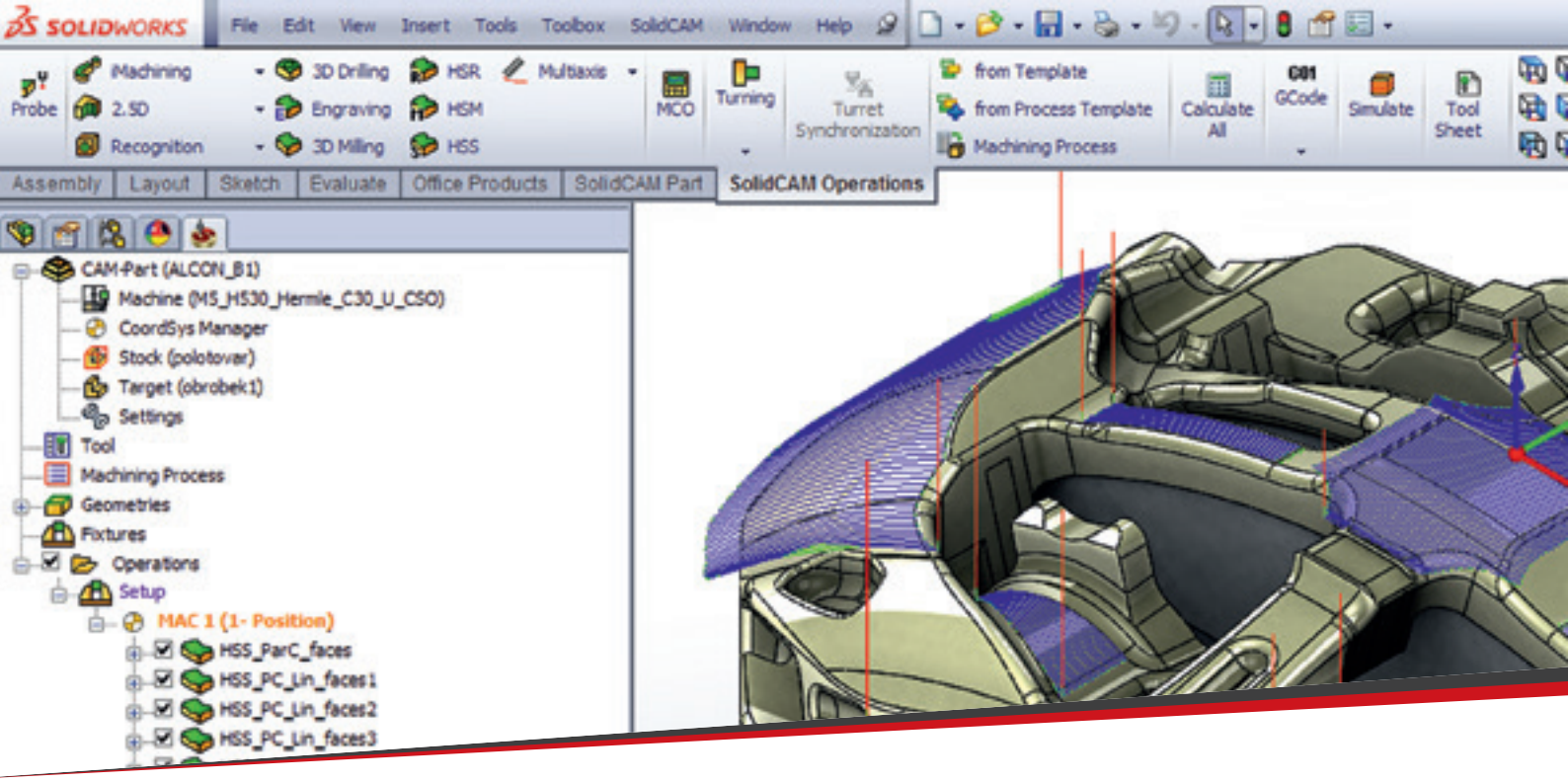

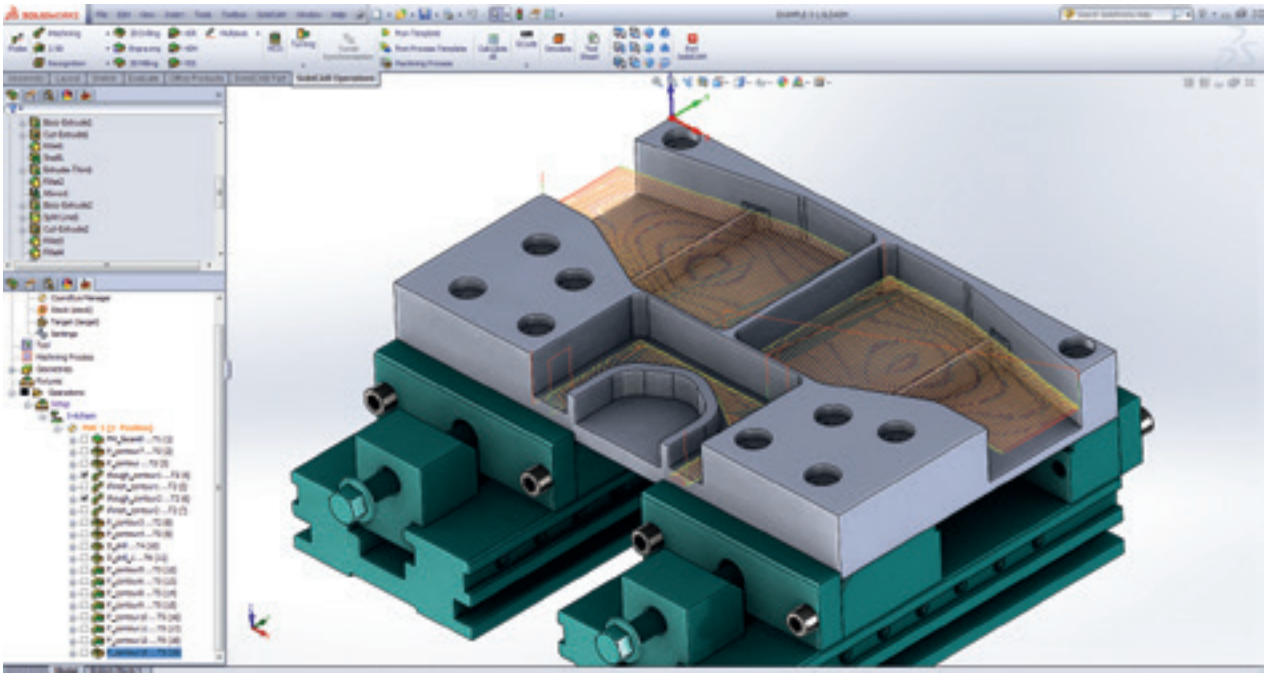

SolidCAM is the Complete, ‘Best-in-Class’ CAM Suite for Profitable CNC-Programming in SolidWorks

SolidCAM, including the revolutionary iMachining, is seamlessly integrated in SolidWorks, with full toolpath associativity to the SolidWorks model. With the single-window integration in SolidWorks, all machining operations can be defined, calculated and verified without leaving the parametric SolidWorks assembly environment.

All 2D and 3D geometries used for machining are fully associative to the SolidWorks design model. If you make any changes to your SolidWorks model, all of your CAM operations will be automatically updated.

Major Benefits of Using SolidCAM in SolidWorks:

- SolidWorks Look and Feel through seamless Single Window integration
- Full associativity: toolpaths automatically update when SolidWorks model changes
- SolidCAM’s 10+ years as SolidWorks Gold Partner
- SolidCAM works in the SolidWorks assembly mode to define Fixtures, Tooling and Vices
- SolidCAM + SolidWorks is scalable with packages for all CNC machine types and applications
- The integrated CAD/CAM-Solution SolidWorks + SolidCAM is available from SolidCAM at a competitive bundle-price

SolidCAM – The Leading Integrated CAM Solution in SolidWorks

SOLIDWORKS
Certified Gold Product

SolidCAM + SolidWorks Automates IC Test System Manufacturing for Essai

Deniz Valle, Essai Corporation Operations Manager:

- "Because SolidCAM is completely integrated with SolidWorks CAD software, we are actually building our CAM programming within SolidWorks."
- "This approach shortens the learning curve for programmers, offers greater geometry editing and manipulation power to manufacturing, and provides a common tool for supporting interaction between designers and machinists."
- "The integrated approach facilitates discussion and resolution of manufacturing issues because everyone is working with the same model and the same modeler. We communicate issues and features a lot better working with an integrated system."

Barabi, Essai Corporation Founder & Manager:

- "If changes are made on the manufacturing side, we capture them on both the design side and the manufacturing side because SolidWorks and SolidCAM are fully associative."
- "The integrated approach has a lot of advantages, including saving time, accessing a single geometry file, and using the intelligence of our design data in a more efficient, systematic way."

» click for more details

You Never Have to Leave the SolidWorks Window!

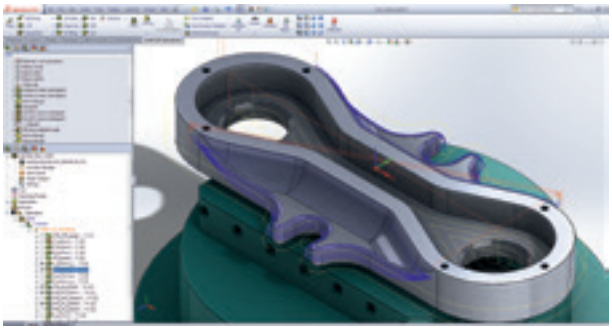

Larry Rehak, Intricate Metal Forming Co:

- "In the last 45 days, since loading the SolidCAM trial version integrated in SolidWorks, I've been able to program complex parts and run them without concern. The machine seems to run smoother than before, cutters last longer and confidence levels are high. I am able to train others here to use SolidCAM with ease. The software is pretty self-explanatory and the tutorials are easy to follow."

Terry Kramer, Kramer Design Corp.:

- "The tight integration with SolidWorks makes my design-to-production life cycle easy and fast. The SolidCAM support team is rock solid. I do some pretty complex 4-axis production projects and SolidCAM handles them very nicely."

iMachining 2D

Imagine putting the Knowledge and Experience of Hundreds of CAM and CNC Masters in the Palm of Your Hand – Experience iMachining's Wizard & Toolpath!

Patented iMachining: "Simply Amazing"

This is what customers, machine tool manufacturers and tooling companies alike say about iMachining. The revolutionary iMachining CAM module, fully integrated in SolidWorks, will make you and your CNC machines more profitable and more competitive than ever before.

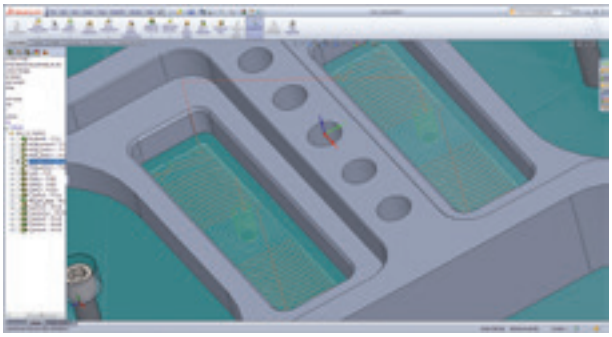

The Revolution in CNC Machining

- Saves 70% and more in CNC machining time
- Extends tool life dramatically
- Provides optimal feeds and speeds, taking into account the toolpath, stock and tool material as well as machine specifications

iMachining provides unbelievable savings and increased efficiency in your milling CNC operations, translating into profits and success. All SolidCAM customers worldwide, who bought iMachining, are enjoying these immense savings!

Unique Technology Wizard

SolidCAM's iMachining has the exclusive patented iMachining Technology Wizard, the industry's first and only Tool Wizard that automatically calculates the cutting conditions for the iMachining toolpath.

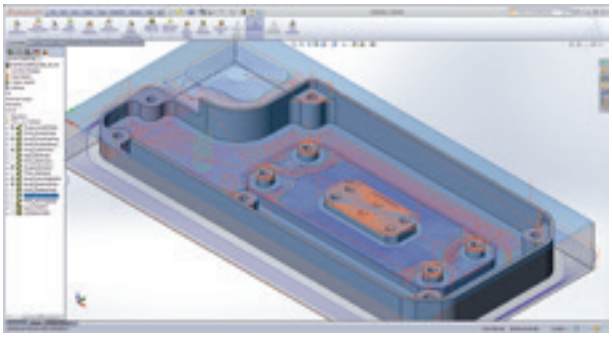

The unique Technology Wizard provides optimal feeds and speeds, taking into account the toolpath, stock and tool material as well as machine specifications.

Using the "Controlled Step Over" technology, the iMachining toolpath ensures that the cutting conditions set by the Wizard are strictly adhered to.

SolidCAM with iMachining is the only CAM system that takes out the guesswork from defining the cutting conditions and automatically provides the optimum values for milling.

» click for more details

iMachining Wizard + iMachining Toolpath = the Ultimate Solution!

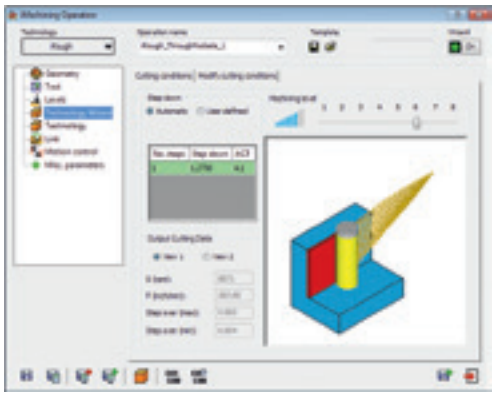

SolidCAM's iMachining highlights:

- Increased productivity due to shorter cycles - time savings 70% and more!
- Dramatically increased tool life
- Unmatched hard material machining
- Outstanding small tool performance
- 4-Axis and Mill-Turn iMachining
- Automatic, optimal feeds and speeds by the unique Technology Wizard
- High programming productivity
- Best user-interface
- Shortest learning curve in the Industry

"We have found all claims for iMachining to hold true in Dixon Surgical - incredible tool life, faster cycles, lighter cutting loads and protection of small cutters. The user interface is very clear and programming iMachining is faster than traditional strategies."

Jay Dixon, Dixons Surgical, UK

"Every day we don't use SolidCAM's iMachining we are losing money!"

Jason Near, Rotary Airlock , IL, USA

"With iMachining, even on low-performance machines, we can reach very high metal removal rates"

Dreiling Maschinenbau GmbH, Germany

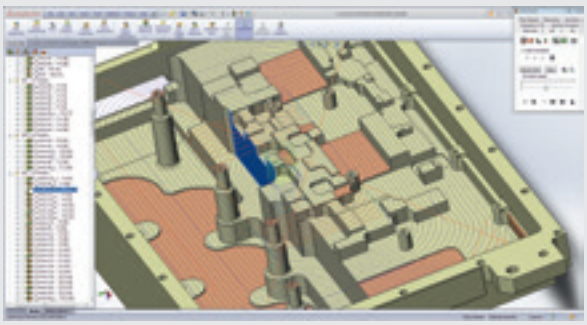

iMachining 3D

Utilizing Proven iMachining 2D & Technology Wizard Algorithms for Roughing and Semi-Finish of Molds, Complex 3D Parts and 3D Prismatic Parts

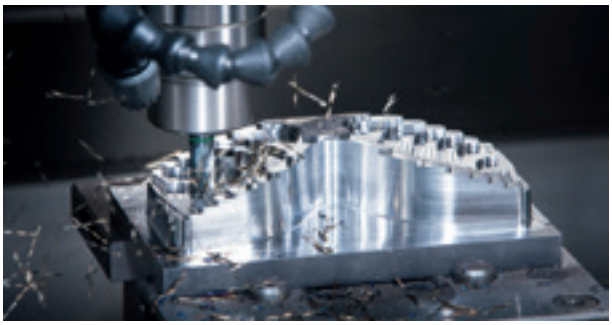

iMachining 3D provides amazing 3D machining results, regularly saving 70 % in machining time, even reaching up to 90 % savings.

iMachining 3D automatically produces a complete, ready to run CNC program, with optimal cutting conditions achieved by the expert Knowledge-based Technology Wizard, to rough and rest rough a complete 3D part, all in a single operation, both for 3D surfaced and prismatic parts.

Combined with its full-depth step-down, intelligent step-up, localized machining and smart positioning, iMachining 3D eliminates almost all retracts, long positioning, and air cutting to produce the shortest optimal cycle times in the industry for roughing and semi-finish of molds, complex 3D parts and 3D prismatic parts.

Combined with SolidCAM HSM Finish, iMachining 3D provides a complete machining solution for 3D parts.

Exclusive iMachining 3D Features:

- Quick solid geometry selection
- Optimized machining of each Z-Step, using proven iMachining 2D technology
- Deep roughing utilizes the whole length of the flute, shortening cycle time and increasing tool life
- Rest material machining in small upward steps, optimized for constant scallop height, further shortens cycle time
- Intelligent localized machining and optimal ordering eliminates almost all long positioning moves and retracts, producing the shortest times in the industry
- A dynamically updated 3D stock model eliminates all air cutting
- Tool path automatically adjusts to avoid contact between the holder and updated stock at every stage

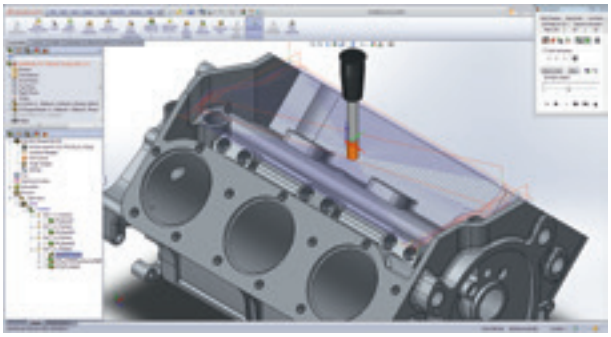

» click for more details

iMachining 3D for Prismatic Parts

With iMachining 3D, you can also mill prismatic parts, which include multiple pockets and islands. This is done in one operation, directly from the solid model of the part and the solid model of the stock, without the need for defining geometry chains. iMachining 3D will then calculate the toolpath automatically and optimally – drastically reducing programming time.

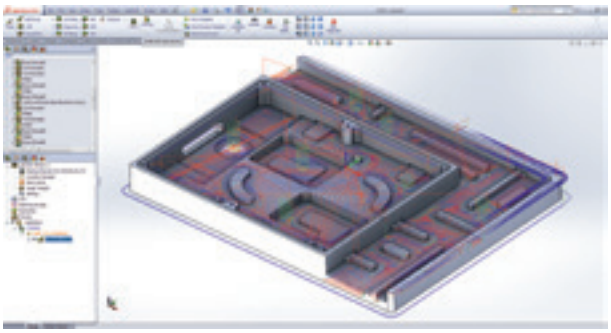

Menes Saves 85 % in Cycle Time in Steel with iMachining 3D!

"I hope we get such results every day – we will have great savings in costs with iMachining 3D!"

Igor, Chief Programmer, Menes

iMachining 3D Cuts Machining Time by 75 % against another CAM-System on Makino CNC:

"iMachining 3D cut machining time from 4 hours, with a Competitor's CAM, down to 58 minutes ... a 75 % time savings!"

Galtronics, China

SolidCAM Customer A.P.A. on iMachining 2D & 3D, mainly for Aluminum machining:

"'Amazing', I have no words to describe my satisfaction from iMachining - I can't even imagine how much time it will save us in Aluminum!"

David Franko, Owner, A.P.A.

2.5D Milling

The Most Powerful & Easiest to create 2.5D CNC Milling Toolpaths: Full Interactive Control + Feature Recognition!

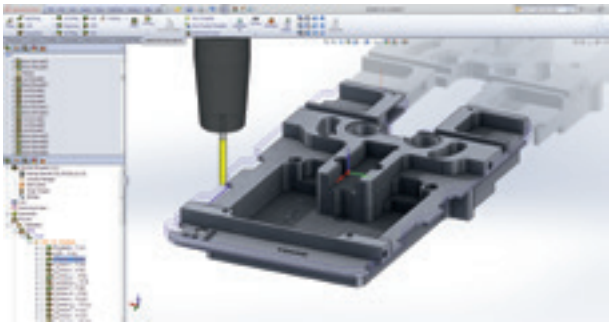

The most straightforward, easy-to-use interface, seamlessly integrated in SolidWorks, combined with the latest tool path technology, provides the fastest, most powerful and easiest to create 2.5D CNC Milling tool paths.

Easily work on parts, assemblies, and sketch geometry to define your CNC machining operations. Quickly place fixtures and components for full visualization.

Best of Both Worlds: Complete Interactive Control + Feature Recognition

SolidCAM provides both interactive and automated 2.5D milling operations on SolidWorks models. Designed for both the novice and advanced user, SolidCAM offers the best of both worlds, with your choice of fully controlled selection of geometry, parameters and CNC programming strategies or Automated Pocket and Drill Recognition and machining.

Interactive 2.5D Mill Operations

Besides the standard 2.5D milling profiling, pocketing and drilling operations, SolidCAM offers:

- Chain modification options (offsetting, trimming, extending etc.), enabling changes to geometry without changing the CAD model
- Automatic rest material machining to cut the material remaining after using larger tools
- Chamfering using the same geometry defined in Profile or Pocket operation
- Thread Milling operation for machining of standard internal and external threads
- Engraving of text on flat and wrapped faces and middle line engraving of a multi-line text
- 3D Contour operation drives the tool along a 3D curve, cutting the model at different depths
- Machining of geometry wrapped around rotation axes, by transforming linear movement to rotary movement

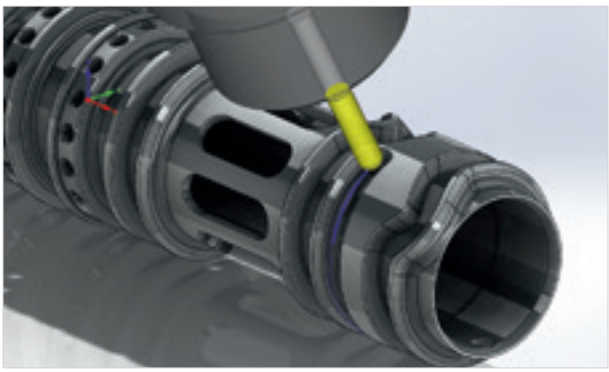

» click for more details

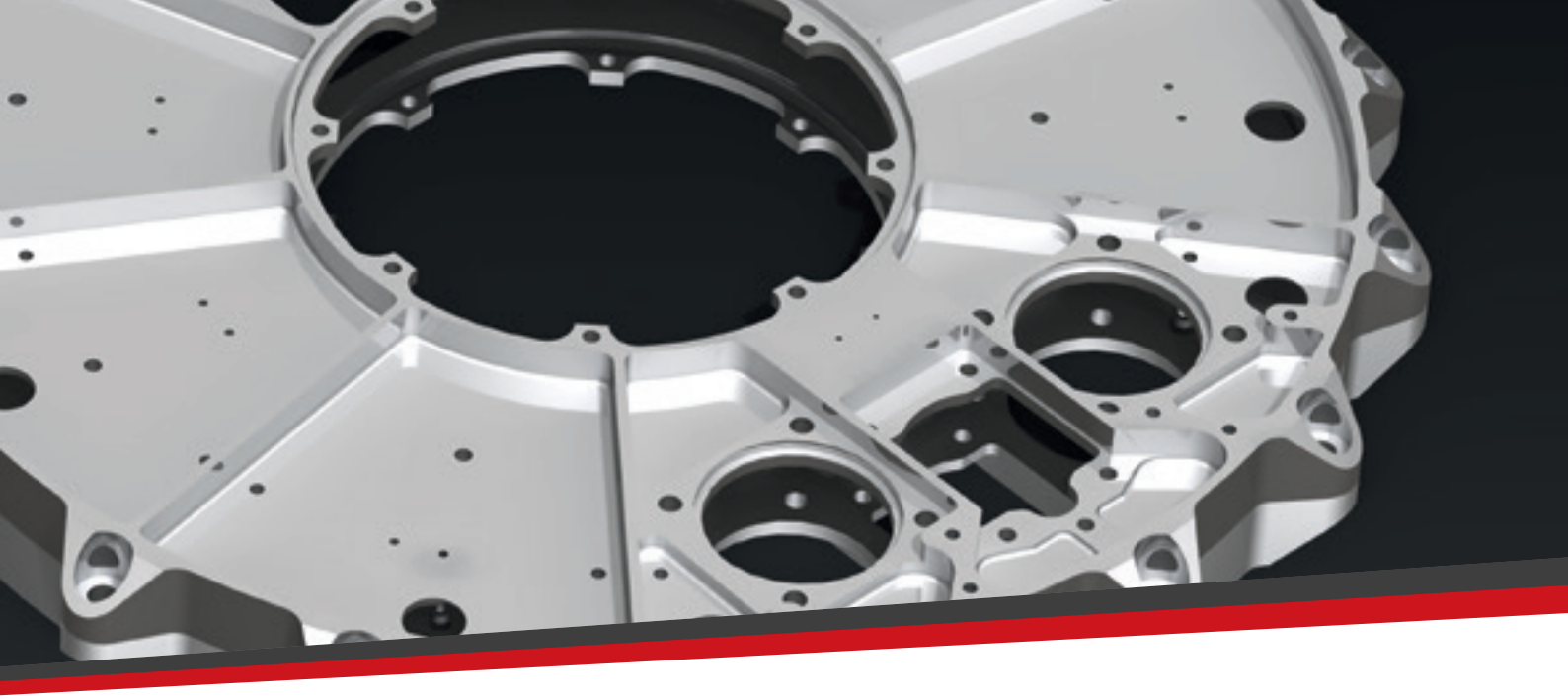

- Special operation for machining of the side slots with undercut by a T-slot tool.

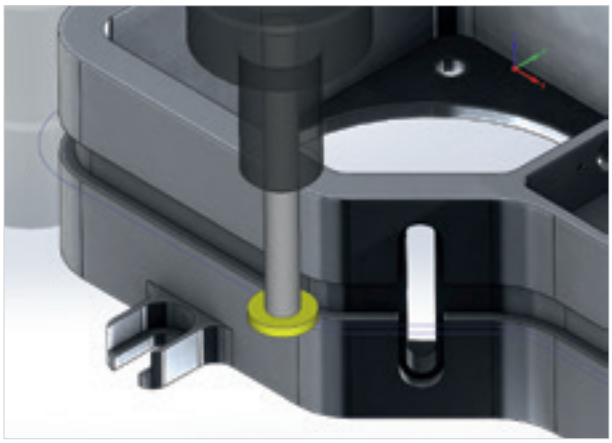

Drill Recognition

Automatic recognition and grouping of holes from the solid model with option to modify resulting geometry. A single Drill Recognition operation can machine groups of holes on varying levels and depths.

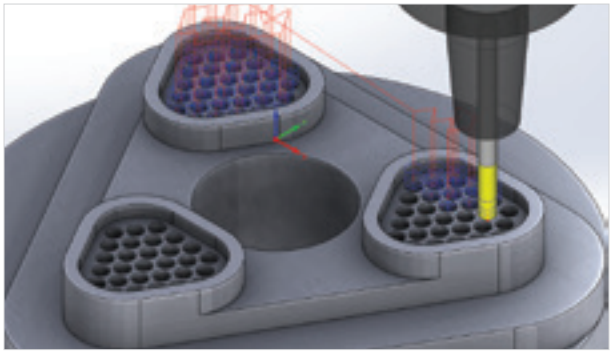

Pocket Recognition

Takes SolidCAM's powerful pocketing operation to the next level, by automatically identifying all pockets on the CAD model. All strategies and options of the standard Pocket operation are available, combined with variable levels and depths recognized from the model faces.

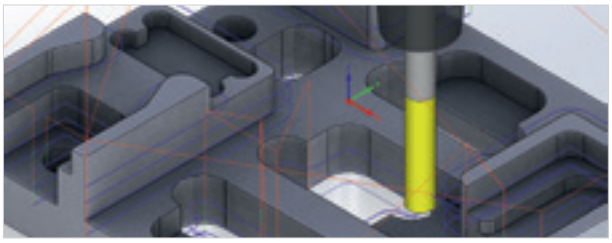

Cycle Toolbox

A very useful and convenient Cycle Toolbox provides additional specialized sub-operations for slots, corners, bosses, ruled surface, etc.

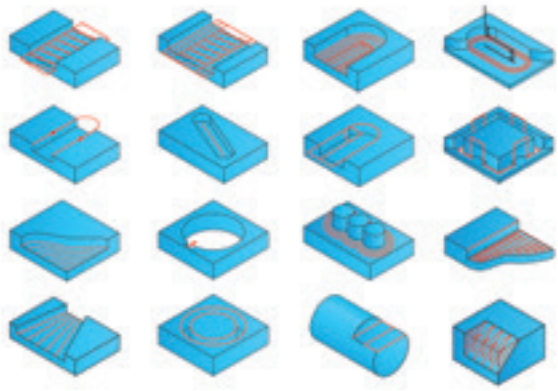

HSS

High Speed Surface Machining of Localized Surfaces – Important Module for Every Machine Shop!

SolidCAM HSS is a high speed surface machining module for smooth and powerful machining of localized surface areas in the part, including undercuts. It provides easy selection of the surfaces to be machined, with no need to define the boundaries. It supports both standard and shaped tools.

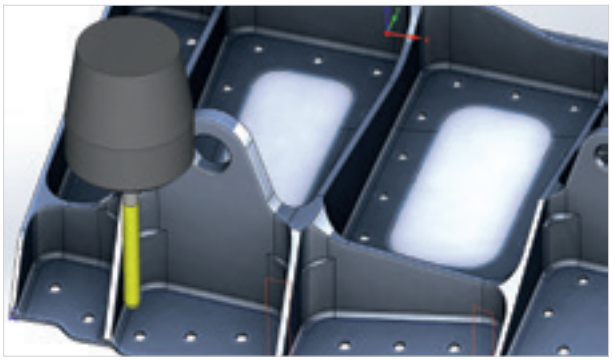

Powerful Surface Machining Strategies for Smooth, Gouge-Free & Optimal Toolpaths

The SolidCAM HSS Module provides numerous surface machining strategies, that produce an efficient, smooth, gouge-free and optimal toolpath to finish the selected surfaces.

HSS provides special toolpath linking options, generating smooth and tangential lead-ins and lead-outs. The linking moves between the toolpaths can be controlled by the user to avoid holes and slots, without the need to modify the model's surface. Retracts can be performed to any major plane.

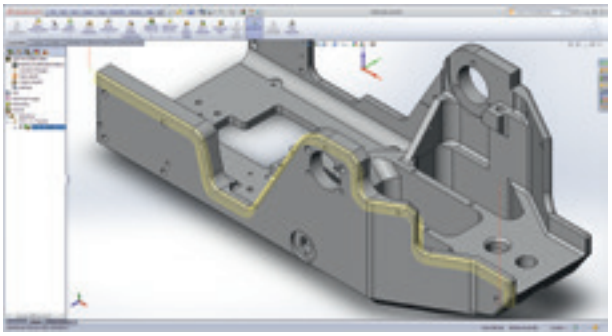

Total Tool Control to Machine Only the Areas You Choose

HSS is the CAM module that takes your 2.5D machining way beyond profiles, pockets and faces, providing a 3D machining capability by driving along specific surfaces on prismatic and 3D parts.

The HSS toolpath is focused on single or multiple surfaces and excels in creating a flowing toolpath on a group of surfaces that make up a complex 3D shape, e.g. fillets.

Experience total tool control to machine only areas you choose, without the need of constraint boundaries or construction geometry.

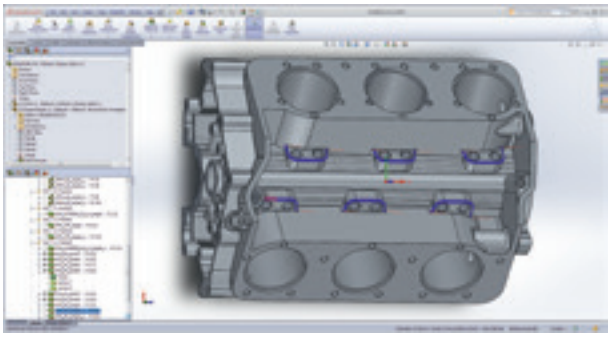

» click for more details

Advanced Gouge Control for Holder, Arbor and Tool

Complete Gouge Control is available for Holder, Arbor and Tool. Adjoining Check Surfaces that are to be avoided can be selected. Several retract strategies are available, under full user control.

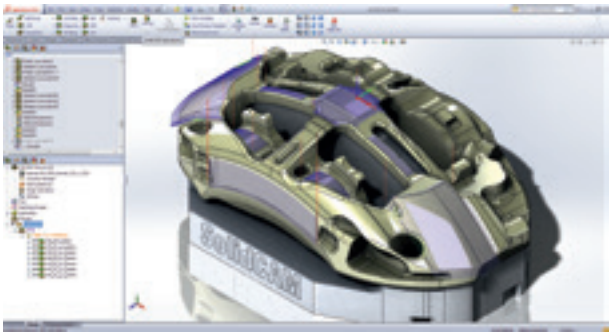

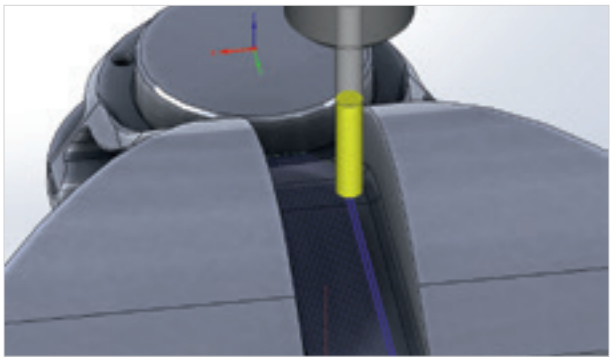

Important Module for Every Machine Shop

The advantages of the SolidCAM HSS module translate to significantly increased surface quality. The SolidCAM HSS module is an important add-on for every machine shop for the machining of all types of parts.

Advanced Linking

Total freedom to control tool entry and tool exit motion, to remove the need for surface modifications. Toolpaths can be extended or trimmed, gaps and holes can be jumped, and you can choose from multiple lead-in/lead-out options.

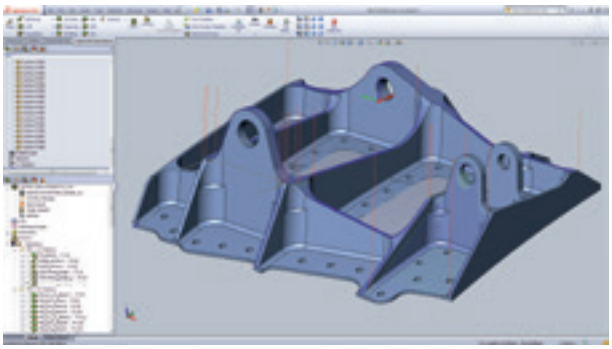

Handling Undercut in HSS

Use Tapered, Lollipop, or T-Slot tools for undercuts or difficult to cut geometry.

Indexial 5-Axis Milling

Powerful SolidCAM Indexial, Multi-Sided Machining – Easiest Coordinate System Definition!

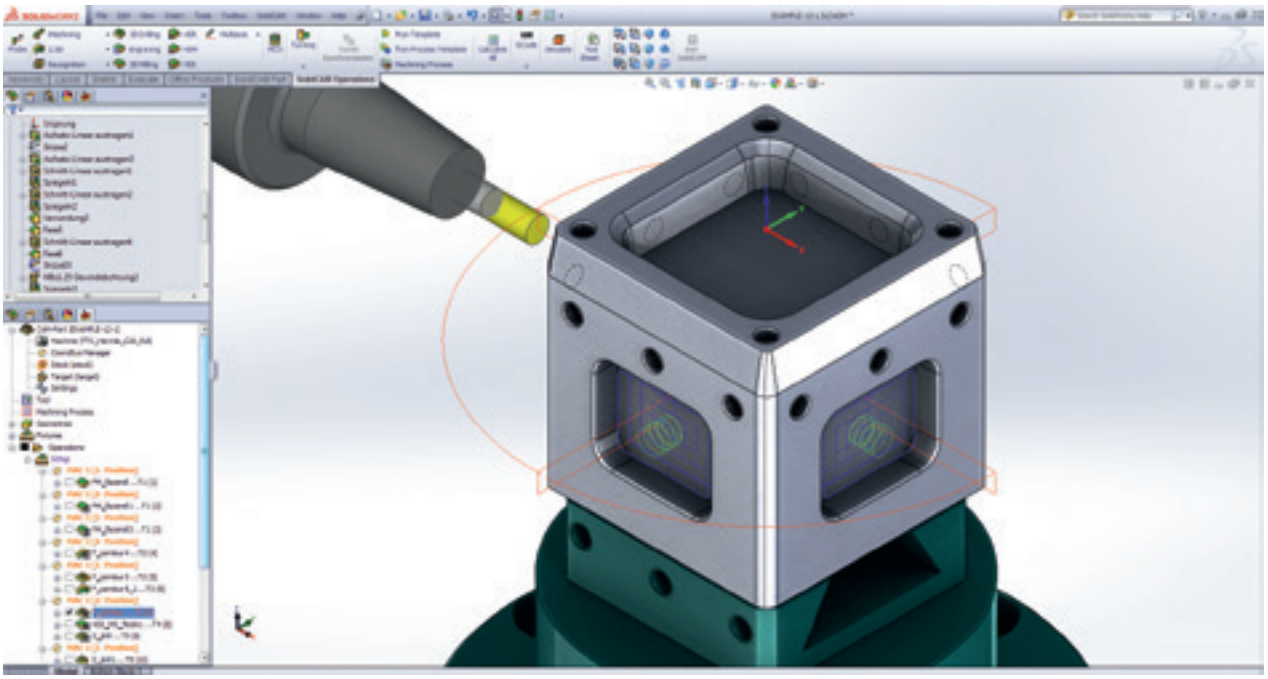

A common scene in any machine shop today is that 4- and 5-axis CNC machines are increasing production, providing faster cycle times.

SolidCAM provides an effective and easy way to program on multiple sides of a part. SolidCAM is exceptionally strong in indexial 4/5-axis machining.

Easiest Coordinate System Definition for Indexial 5-Axes!

Tired of dealing with construction views, copying models, and rotating them in space for new alignments? Do you still copy and transform geometry to separate layers for indexial programming?

Experience single machine home position, with One-click orientations for indexed setups – SolidCAM speeds up multi-sided machining by eliminating multiple coordinate system constructions. Define a Coordinate System on the fly, by just picking a face, and continue programming your part.

- SolidCAM's "select a face and machine" is the fastest approach to indexial programming
- Our coordinate system manager keeps track of all necessary data for each tool orientation
- Solid Verify simulation shows tool holders and fixtures, together with material removal for all machining operations

» click for more details

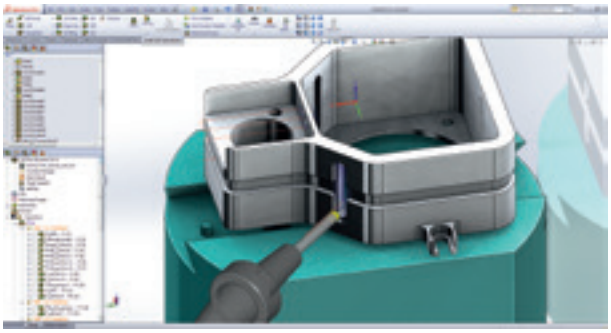

Efficient, Edit-Free G-Code for Multi-Axis Machines

SolidCAM offers multiple options to get efficient G-code for multi-axis machines.

SolidCAM's post processor can be set up to handle all rotations and work offset shifting, to eliminate the need for setting up multiple work offsets at the machine. Whether your controller can calculate part rotations internally or it needs the post processor to handle rotations, SolidCAM has this covered.

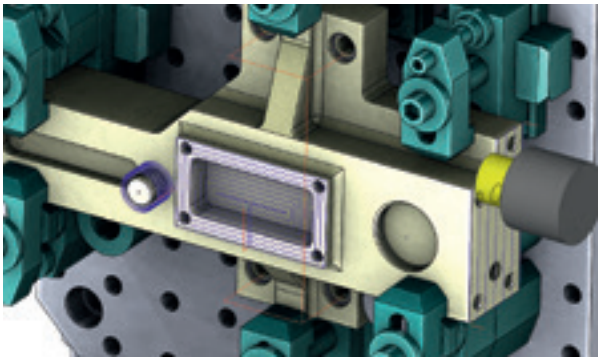

For controllers with advanced plane rotation or coordinate rotation functions, SolidCAM's post processors are built to use these internal CNC functions. If you have a machine without such functions, users can input the part location inside SolidCAM and the G-code will handle all of the transformations for each rotation.

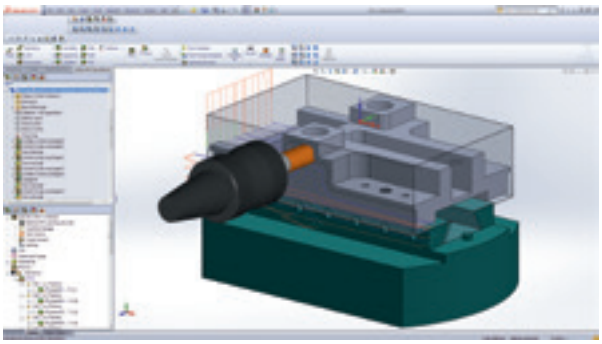

Our philosophy to indexial milling is simple: from software to G-code – make the process for indexial milling the same as for single-sided milling. No need for any special functions or tricks inside the software to machine multi-sided parts – it should just work!

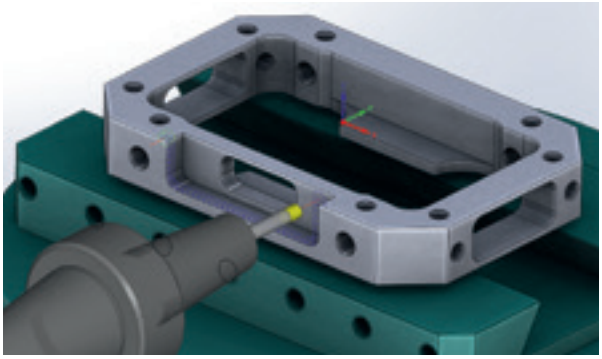

HSM - 3D High Speed Machining

Powerful Roughing and the Finest Finish Toolpaths available for 3D Machining!

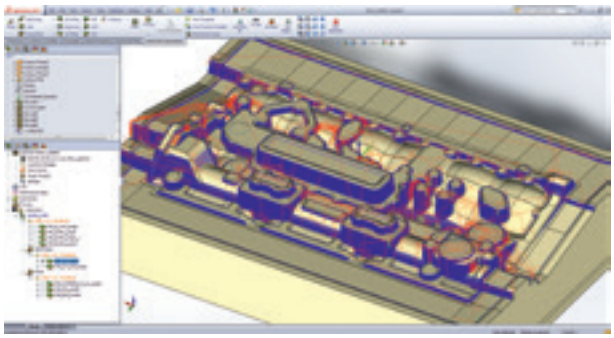

Experience 3D machining taken to an entirely new level of smoothness, efficiency and smart machining, with the finest toolpaths available anywhere for 3D machining.

SolidCAM's HSR/HSM module is a very powerful and market-proven 3D high-speed machining module for complex 3D parts, aerospace parts, molds, tools and dies.

It offers unique machining and linking strategies for generating 3D high-speed toolpaths. It smooths the paths of both cutting moves and retracts, wherever possible, to maintain a continuous machine tool motion - an essential requirement for maintaining higher feedrates and eliminating dwelling.

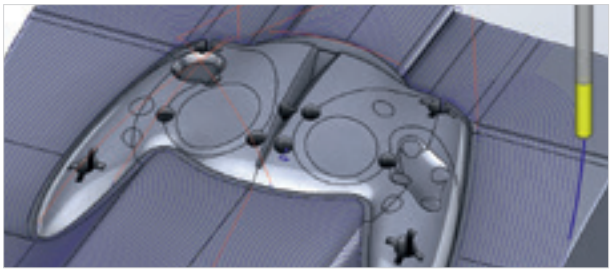

HSR – High Speed Roughing

SolidCAM HSR provides powerful high-speed roughing strategies including contour, hatch, hybrid rib-roughing and rest roughing.

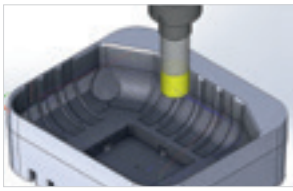

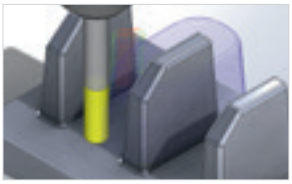

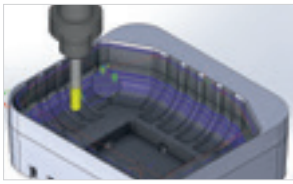

HSM – High Speed Finishing

With SolidCAM's HSM module, retracts to high Z levels are kept to a minimum. Angled where possible and smoothed by arcs, retracts do not go any higher than necessary, minimizing air cutting and reducing machining time.

The result of HSM is an efficient and smooth toolpath that translates to increased surface quality, less wear on your tools and a longer life for your machine tools.

With demands for ever-shorter lead and production times, lower costs and improved quality, High Speed Machining is a must in today's machine shops.

» click for more details

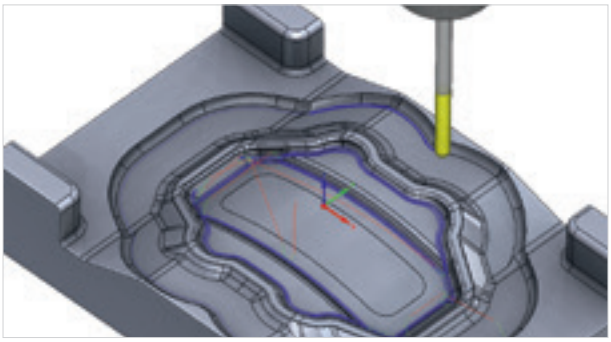

The SolidCAM HSM module features several enhancements to CAM technology that make high speed operations possible, including avoiding sharp angles in the tool path, ensuring that the tool stays in contact with the part as much as possible, and optimizing non-machining moves to reduce air cutting and generating smooth and tangential lead in/out.

Any HSM 3D machining strategy can be controlled by specifying the surface slope angle to be machined or by specifying the machining boundary.

A comprehensive set of boundary creation tools are provided, including silhouette boundaries, cutter contact area boundaries, shallow boundaries, rest area boundaries and user defined boundaries.

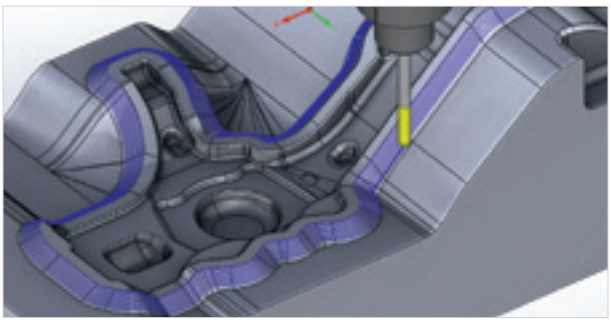

HSM – 3D Machining to the Highest Level

SolidCAM HSM module is a powerful solution for all users who demand advanced High-Speed Machining capabilities. It can also used to improve the productivity of older CNC's with reduced air cutting and smoothing arcs that maintain continuous tool motion.

Let us show you how HSM takes 3D Machining performance to the highest level – all with your current machines.

Simultaneous 5-Axis Milling

Powerful Simultaneous 5-Axis Toolpaths with a Very Friendly User-Interface

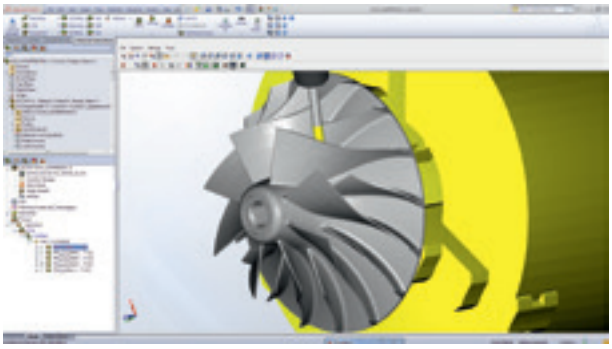

Benefit from the most tested and proven 5-axis CNC milling toolpaths in the industry, with the most advanced control over all aspects of toolpath and collision checking and with a very friendly user interface.

- Wide variety of Simultaneous 5x cutting strategies
- Flowline cutting produces a toolpath that follows the natural shape of the component
- Multi-surface finish machining keeps the tool normal to the surface (or with specified lead and lag) to provide a smooth surface finish
- Specific application solutions for SWARF, Multi-Blade, Port, Contour 5x, Multi-Axis drill and conversion of HSM to Sim 5-Axis
- Advanced tool tilting control and direct control on side tilting and lead\lag angles
- Automatic gouge avoidance strategies that check each part of the tool and the holder
- Realistic full 3D machine simulation with comprehensive collision and axis limits checking

SolidCAM 5-Axis machining supports all 5-Axis machine tools including Table/Table, Table/Head and Head/Head gantry machines as well as the latest Mill-Turn machining centers.

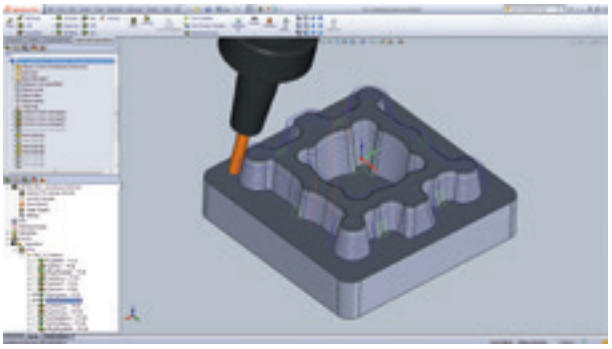

Flexibility and Control

Each 5-Axis machining strategy provides sophisticated options for approach/link control and tool axis control.

Link and approach moves are fully gouge protected and different strategies may be used depending on the distance of the link move. SolidCAM also provides options for control over lead/lag and side tilt angles to give complete control over the final toolpath.

Collision Avoidance for Tool and Holder

Collision Avoidance is supported for both the tool and holder and a range of alternatives is offered to avoid collision. The machine simulation provides complete Cutter and Tool-holder gouge checking.

» click for more details

SWARF Machining

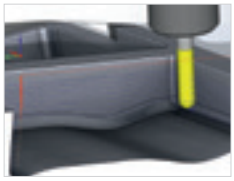

SWARF machining allows the side of the tool to be tilted over to machine the side wall at the correct angle. SWARF cutting uses the whole cutting length of the tool, resulting in better surface quality and shorter machining time.

Contour 5-Axis Machining

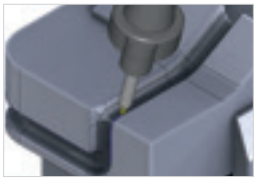

The Contour 5-axis machining strategy tilts the tool along a chained 3D profile drive curve, while aligning the tool axis according to defined tilt lines, making it ideal for generating 5-axis toolpath for deburring and trimming.

Multi-Blade Machining

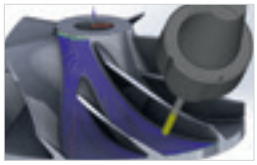

The Multi-blade machining operation easily handles impellers and bladed disks, with multiple strategies to efficiently rough and finish each part of these complex shapes. Multi-bladed parts are used in many industries and this operation is specifically designed to generate the necessary toolpaths for the different multi-blade configurations.

Multi-Axis Drilling

The Multi-Axis Drilling operation uses SolidCAM's automatic hole recognition and then performs drilling, tapping or boring cycles, at any hole direction easily and quickly. All the advanced linking, tilting and collision avoidance strategies are available in this operation.

Port Machining

The Port machining operation is an easy-to-use method for machining ports with tapered lollipop tools, and has collision checks for the entire tool. It provides both roughing and finishing toolpaths to make ports from castings or billet.

Convert HSM to Sim 5-Axis

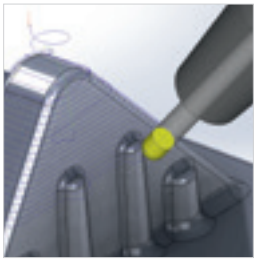

The Convert HSM to Sim 5-Axis milling operation converts HSM 3D toolpaths to full 5-Axis collision-protected toolpaths. This will maintain optimum contact point between the tool and the part and enables the use of shorter tools for more stability and rigidity.

Turning

SolidCAM Module for Fast and Efficient Turning

SolidCAM provides the most comprehensive turning package with powerful toolpaths and techniques for fast and efficient turning.

SolidCAM Turning provides functionality for a wide range of machine tools, including 2-Axis lathes, multi-turret configurations, sub-spindle turning centers and mill-turn machines.

On a mill-turn machine, C-, Y- and B-Axis milling and drilling take place within the same program as the turning, providing a fully integrated and associative programming solution.

SolidCAM produces advanced rough and finish profile turning, together with support for facing, grooving, threading and drilling in either canned cycles or long G-code.

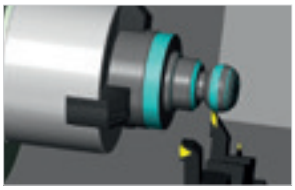

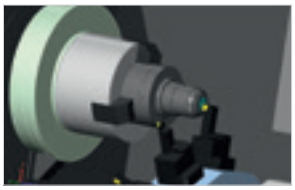

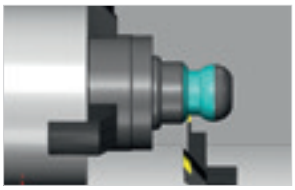

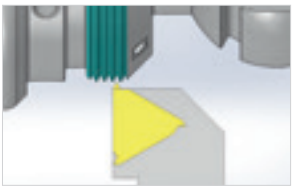

Toolpath calculation takes into consideration the tooling insert, tool holder and previously machined stock material, to avoid gouging and eliminate air cutting.

Standard fixture libraries are available and specialized fixtures can be added.

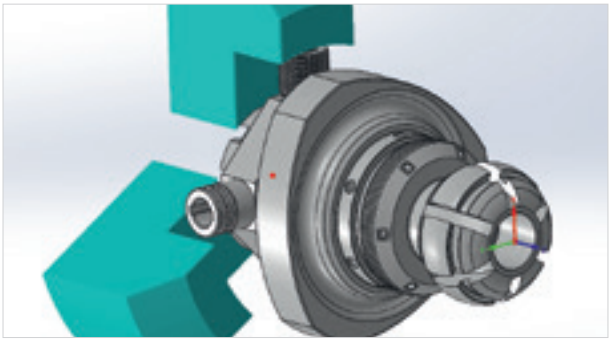

Updated Stock for both Turning & Milling

SolidCAM has the ability to keep the stock updated live within the operations tree. Updated stock is supported from the most basic 2-axis turning center, right through to a CYB multi-turret, sub-spindle Mill-Turn CNC machine.

On a sub-spindle turning center, when a component is transferred from the main spindle to the sub spindle, the updated stock transfers with it. Any subsequent machining on the sub-spindle will detect the stock in the state that it left the main spindle, ultimately providing the most efficient machining sequence possible.

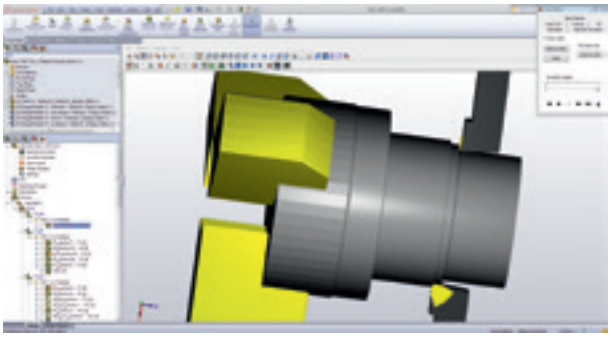

» click for more details

Advanced Turning Operations

- Balanced Roughing: two tools working simultaneously, or in trailing mode, to perform roughing turning of long and large parts
- Angled Grooving: performs internal or external inclined grooves, at any defined angle
- Manual Turning: performs turning according to user-defined geometry, regardless of stock and target model
- 4th Axis Simultaneous Turning: performs machining of curved profile using the B-axis tilting capabilities of the tool, in order to machine undercut areas in a single machining step
- Multi-Turret Synchronization: powerful capability to synchronize multiple turret operations along a machining time line

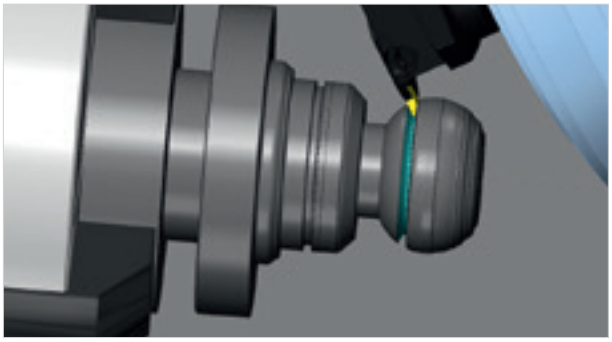

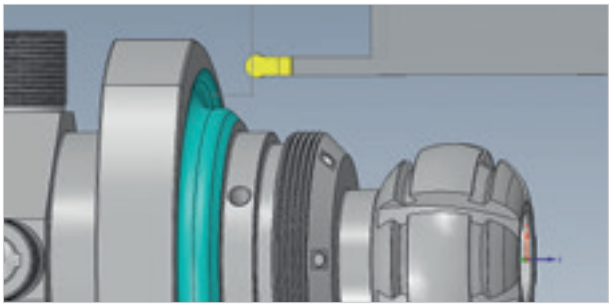

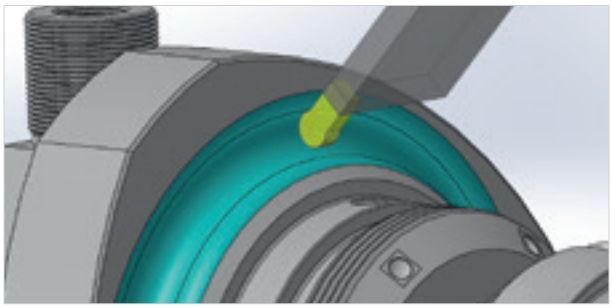

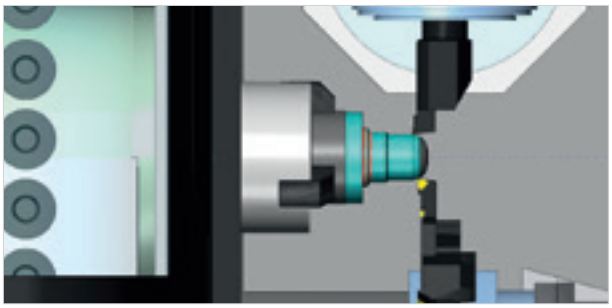

Advanced Mill-Turn

Easy Programming for Complex Multiple Turret and Multiple Spindle CNC Machines

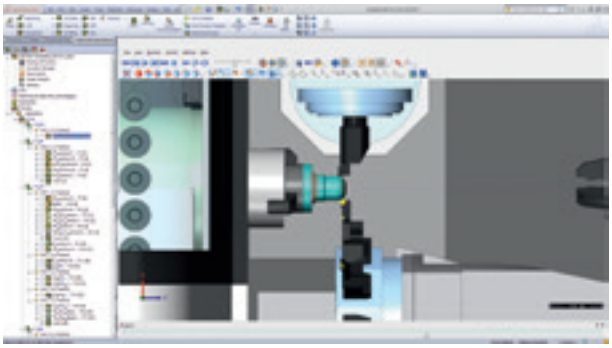

The fastest growing and most demanding class of CNC machines on the market today are multi-task machines that combine several capabilities into one machine – multiple spindles, multiple turrets, material being machined in multiple stages, transferring from spindle to spindle without handling, stock inserted at one end, finished parts coming out the other.

4/5-Axis Simultaneous Mill-Turn machines have many uses and allow much more flexibility and capabilities not offered from other machine configurations. With this in mind, many of these have multi-axes, upper turrets, lower turrets, CYB and Sub Spindles.

SolidCAM has the advanced technology to support the programming of all the latest multi-function CNC machines, providing powerful tools that are easy to learn and use, offering ultimate flexibility and configurability.

- The use of tail stocks, steady rest, sub-spindles, rotary and linear turrets along with C-Axis, CY-Axis and B-Axis, are regular features on today's Mill-Turn machine tools. In this collision rich environment, the programming of these machines is made simple and safe by utilizing SolidCAM's turning and milling operations in a single environment.
- Support for multi-turret and multi-spindle programming, with turret synchronization and full machine simulation, is seamlessly integrated into one extremely powerful package.
- All SolidCAM milling and turning operations, including the powerful, revolutionary iMachining operations, are available for the programming of mill-turn machines. All ancillary devices can also be defined and taken into account for simulation and gouge checking.

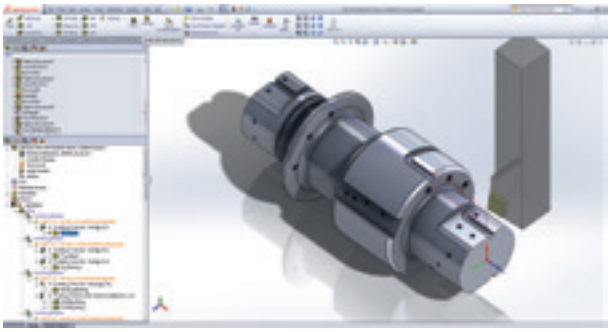

Easy Programming for Complex Mill-Turn CNC Machines

SolidCAM goes beyond just programming these complex machines, with intelligent management of rest material between Milling and Turning operations, for the most efficient toolpaths and reduced cycle times, ensuring the highest possible productivity.

» click for more details

Machine ID

Defines the CNC machine components and their kinematics, enabling users to setup and support the most complicated mill-turn machines easily and effectively.

MCO (Machine Control Operation)

MCO (Machine Control Operation) enables the user to insert various control operations while manufacturing a part. These operations control the CNC machine and activate different options and devices such as: opening or closing fixtures, activating coolants, rotating part, moving part from one table to another …

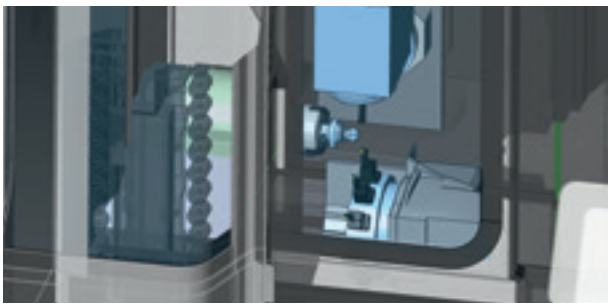

Transfer Between Spindles

Control the transfer of parts between the main and sub-spindle, using Machine Control Operations. Ready made MCOs provide the best solution for this process.

iMachining in Mill-Turn

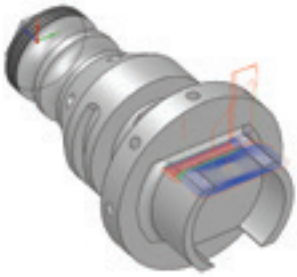

In a mill-turn part, using iMachining 2D & 3D saves you programming and cycle time. Additionally, iMachining has the very important advantage of exerting smaller cutting forces, eliminating vibrations and excessive tool wear, even in situations of non-rigid workpiece holding.

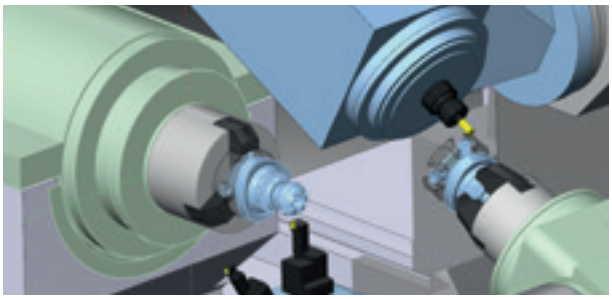

Mill-Turn Machine Simulation

Mill-Turn machine simulation in SolidCAM offers a full kinematic simulation package, supporting simulation of all turning and milling operations and of all CNC machine components and devices. The simulator offers full collision detection between machine components, workpiece, fixtures and tool holders.

All the cycles and movements are supported along with the full graphics of the machine components and auxiliary devices such as tail stock and steady rest, providing safety as the part is fully tested before reaching the actual machine tool.

Solid Probe

New Module for Home Definition and On-Machine Verification

SolidCAM's Solid Probe Module

SolidCAM is bringing you Solid Probe, a new SolidCAM module that provides capabilities for Home definition and On-Machine Verification, using probes on the CNC machine, to do setup and control the quality of machined parts.

Full visualization of all the probe movements, provided by SolidCAM Machine Simulation, enables you to avoid any potential damage to the Probe tool.

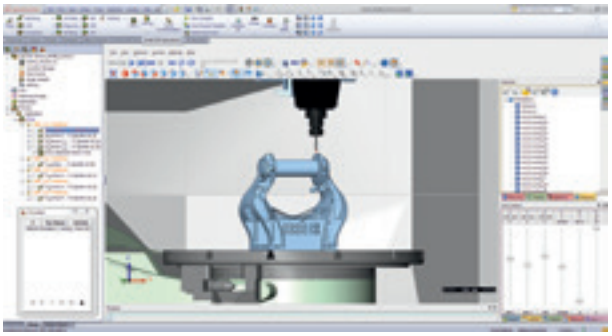

Solid Probe is a Must Module for Every Machinist using Probes:

- Easy Home definition
- On-Machine Verification
- Tool Presetter support
- Easy geometry selection on solid model
- Supports a wide range of probe cycles
- Visualization of all the Probe tool movements
- Support of different Probe controllers

Combined Probe and Machining Operations

Machining operations and Probe operations are intermixed in the SolidCAM CAM manager and can use the same geometries on the solid CAD model. When the solid model is changed, both the machining and probe operations can be automatically synchronized to the change.

» click for more details

Home Definition

Solid Probe provides an easy solution for home setting, using 16 different cycles, to easily define home positions, replacing manual setup procedures.

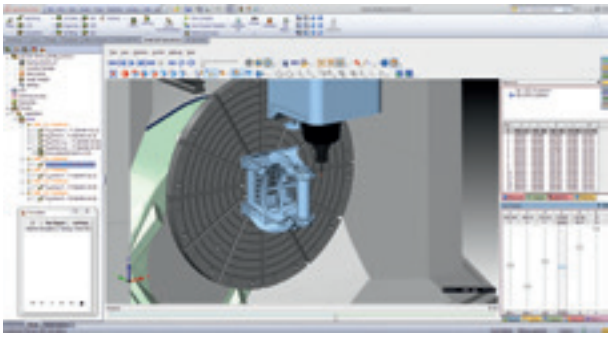

On-Machine Verification

Solid Probe cycles are used for measuring machined surfaces, without transferring the part to a CMM machine – the part can be inspected on the machine tool itself.

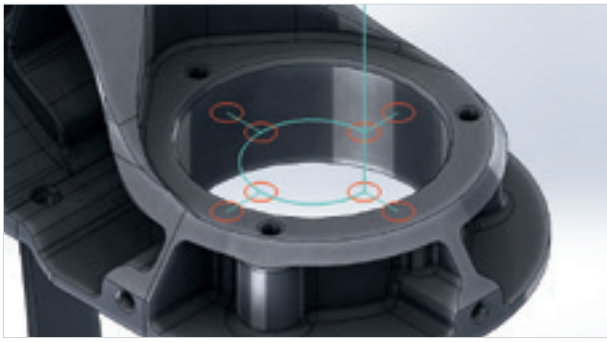

Preview of Cycle Movements

Solid Probe uses the same geometry as the 2.5D milling operations. Full control over tolerances, different sorting options and direct preview of cycle movements are provided.

Tool Presetter Support

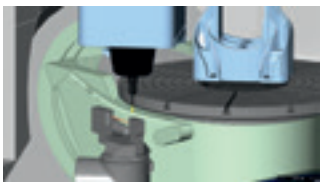

The Solid Probe module includes support of Tool Presetter.

This option enables checking milling or turning tools between machining operations. It is a useful option for tool checking, after every operation or every tool change event. It enables tool breakage detection, providing safe machining.

About SolidCAM

SolidCAM – The Leaders in Integrated CAM

Founded 1984, SolidCAM has over 29 years of expertise in CAM development and applications.

The integration strategy of SolidCAM, in the major 3D mainstream CAD systems, SolidWorks and Inventor, has created major growth and established SolidCAM as the leaders in Integrated CAM.

SolidCAM has the Certified Gold-Product status from SolidWorks since 2003 and provides seamless, single-window integration and full associativity to the SolidWorks design model.

SOLIDWORKS
Certified Gold Product

InventorCAM has the Autodesk Certified Product status and provides seamless, single-window integration and full associativity to the Inventor design model.

SolidCAM is a Consistent Growth Leader and has been named by CIMdata as the fastest growing CAM vendor worldwide, five out of the past eight years.

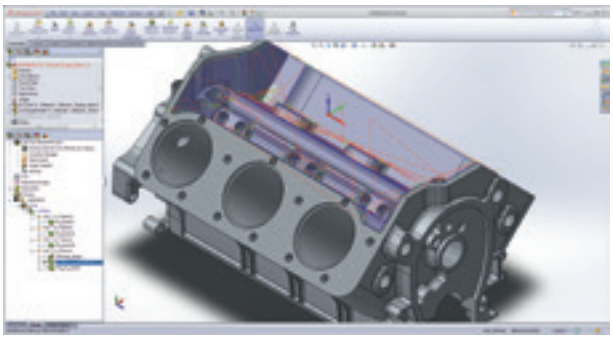

Our Advantages

- Providing a powerful, easy-to-use, complete, integrated CAD/CAM solution that supports the complete range of major manufacturing applications including iMachining 2D, iMachining 3D, 2.5D Milling, High Speed Surface Milling, 3D Milling/High-Speed Machining, Multi-Sided Indexial 4/5-Axes Milling, Simultaneous 5-Axes Milling, Turning, Advanced Mill-Turn, WireEDM and Solid Probe.
- SolidCAM's unique, revolutionary iMachining technology saves 70% in CNC machining time & more and extends tool life dramatically.
- The iMachining Technology Wizard provides a reliable partner in automatically determining speeds and feeds and other machining parameters.

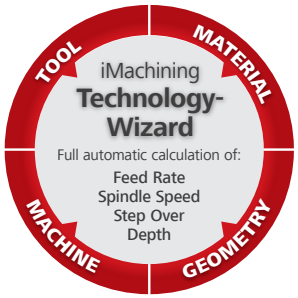

- iMachining provides unbelievable savings and increased efficiency in your milling CNC operations, translating into profits and success. All SolidCAM customers worldwide, who bought iMachining, are enjoying immense savings!

The unique, revolutionary Milling technology
iMachining®
patent by SolidCAM

TIME SAVINGS
70%
... AND MORE!

» click for more details

Our Sales & Support Network

Along with our worldwide direct sales and support teams from our many international SolidCAM offices, SolidCAM has a worldwide CAM distributor network in 50 countries, providing the best technical support and post-processor customization.

Our Customers

SolidCAM's large user base, with more than 19,000 seats, includes customers in the mechanical manufacturing, electronics, medical, consumer products, machine design, automotive and aerospace industries, and in mold, tool & die and rapid prototyping shops.

SolidCAM customers include small Job Shops, medium-size Engineering and Manufacturing companies, large Aerospace and Automotive companies and technical education institutions.

SolidCAM on Facebook

Join our Facebook page for daily posts in your News Feed about SolidCAM News, iMachining Success Stories, SolidCAM Professor Recordings, Upcoming Webinars, Events and Product releases.

www.facebook.com/SolidCAM

SolidCAM Professor

Our SolidCAM professor videos provide hundreds of easy to follow, tightly focused on a specific function, tutorial videos available 24 hours a day, 365 days a year, right on our website.

www.solidcam.com/professor

SolidCAM University Weekly Webinars

SolidCAM University runs weekly webinars for our partners, customers and potential cutomers. We invite you to join one of our upcoming SolidCAM webinars. During our webinar demonstration you can interact directly with the presenter and have your questions answered.

www.solidcam.com/webinars

SolidCAM on YouTube

See powerful cutting videos of SolidCAM & iMachining on our SolidCAM iMachining YouTube channel.

www.youtube.com/SolidCAMiMachining

SolidCAM CNC Technology Centers

The Perfect Place to Demonstrate the Power of SolidCAM Software with Live Cutting

SolidCAM GmbH Technology Center in Germany

Our major technology center is located at the SolidCAM GmbH office in Schramberg, Germany.

All Milling, Turning and Mill-Turn technologies are deeply checked and demonstrated on our latest CNC machines:

- Hermle C30 5-Axis CNC Machine
- DMG NTX 1000 Mill-Turn Machine with Upper B-Axis, Lower Turret and Sub-Spindle

All of our leading technologies, including the revolutionary iMachining, Simultaneous 5-Axis and advanced Mill-Turn, are tested in practical settings.

Customers and resellers, as well as participants of our training and education, benefit greatly from this practical experience.

Faster from the CAD model to the finished workpiece – this is the motto of our Technology Center.

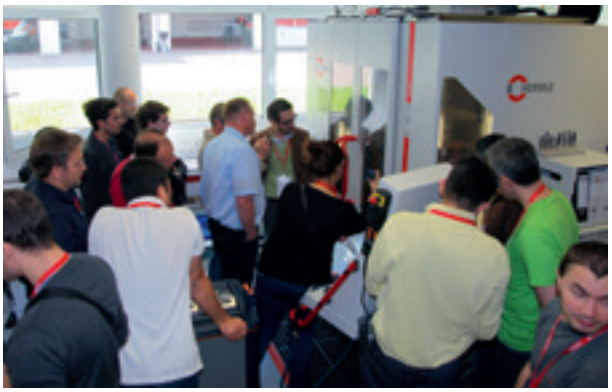

» click for more details

SolidCAM USA Technology Center

The USA Technology Center is located at our SolidCAM Inc. offices in Newtown, Pennsylvania.

A HURCO VM10i CNC Machine is used to demonstrate the power of our Milling modules, enabling us to show customers all of the benefits of revolutionary iMachining, HSS, HSM, and more, in a shop floor style environment.

A classroom setting for our customers is located right next to the machine for practical training.

Perfect Testing for Our Latest Technologies

Our latest technologies are tested and proven out in-house at our worldwide technology centers. Customers benefit from practical CNC training along with software training.

Join Our LIVE Cutting Webinars from our Technology Centers

Attend our Live-Cutting webinar events to see live the power of iMachining 2D & 3D and our advanced Mill-Turn. Visit our website to register for these webinars.

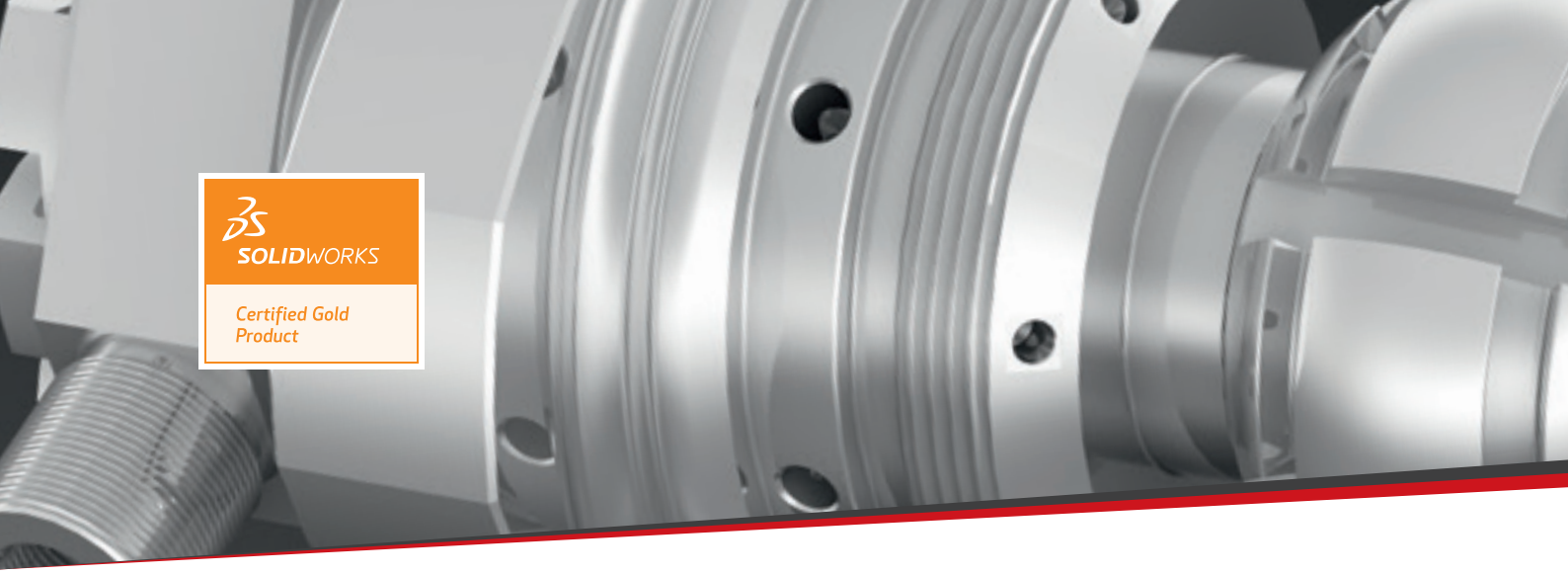

SolidCAM

iMachining – The Revolution in CAM!

SolidCAM GmbH
Gewerbepark H.A.U. 36
78713 Schramberg
E-Mail: info@solidcam.de
Phone: +49 7422 2494-0

Geschäftsstelle Süd
83026 Rosenheim

Geschäftsstelle Nord
48477 Hörstel

Geschäftsstelle Ost
98527 Suhl-Friedberg

Geschäftsstelle West
67547 Worms

Geschäftsstelle Süd-Ost
92224 Amberg

SolidCAM Inc.
E-Mail: infonorthamerica@solidcam.com
Phone: +1 866-975-1115

SolidCAM Ltd.
E-Mail: info@solidcam.com
Phone: +972-5333-150

SolidCAM UK
E-Mail: info@solidcamuk.com
Phone: +44 1226 241744

SolidCAM France
E-Mail: info@solidcam.fr
Phone: +33-1-3935-7971

SolidCAM CZ
E-Mail: ivan.cimr@solidcam.cz
Phone: + 420 603-893-701

SolidCAM India
E-Mail: info.india@solidcam.com
Phone: +91 80 26678933

SolidCAM China
E-Mail: marketing.china@solidcam.com
Phone: +86 10 8599 7302

SolidCAM Japan K.K.
E-Mail: info.japan@solidcam.com
Phone: +81 3 5733 8322

SolidCAM ANZ
E-Mail: info@solidcam.com.au
Phone: +61 400 622 133

YouTube Broadcast Yourself™
www.youtube.com/SolidCAMProfessor
www.youtube.com/SolidCAMiMachining

www.facebook.com/SolidCAM

www.solidcam.com